Korea Technology and Information Promotion Agency for SMEs

(max 10 pages)

Technology Proposal for 2026 TIPA* International Joint R&D Program

(TIPA: Korea Technology and Information Promotion Agency for SMEs)

The objective of this Technology Proposal is to introduce the institute's proprietary technologies and present potential collaborative areas for Korean SMEs, facilitating joint research and development projects under the 2026 TIPA International Joint R&D Program. This Technology Proposal will be publicly disclosed in conjunction with the official announcement of the 2026 TIPA International Joint R&D Program.

1. Technology Proposer Information

Proposer	Name	John Sutherland	Email	coria-consortium@purdue.edu
Institute Name	Purdue University			
Address	500 Central Drive, West Lafayette, IN 47907			

2. Technology Overview

Title of Proposed Technology	**Physics-Informed AI and Digital Twin-Based Intelligent Manufacturing Technology for Forming Error Reduction in EV Hairpin Motor Production Equipment**			
Korea's 12 National Strategic Technology Fields	Semiconductor/Display ( ), Secondary Battery ( ), Advanced Mobility (√), Next-gen Nuclear Power ( ), Advanced Bio ( ), Aerospace/Marine ( ), Hydrogen ( ), Cybersecurity ( ), AI (√), Next-gen Communication ( ), Advanced Robotics & Manufacturing (√), Quantum ( )			
Industrial Technology Classification [1]	**Technology Field 1** (Large Category)		**Technology Field 2** (Large Category)	
	Machinery and Materials			
	Medium Category	Small Category	Medium Category	Small Category
	Precision Manufacturing Machinery	*Electrical/Chemical Energy–Based Processing Machines*		
Concept of Proposed Technology	**Core Concept** **Paradigm Shift in the Automotive Industry Market** The global automotive industry is undergoing a rapid transition from traditional internal combustion engine–centered technologies to electric power–based eco-friendly vehicles, driven by climate change responses and strengthened carbon neutrality policies. Major countries are implementing policies to gradually ban the sale of new internal combustion engine vehicles, and accordingly, global automakers are making large-scale investments to secure next-generation mobility technologies centered on electric vehicles (EVs), hydrogen fuel cell vehicles (FCEVs),			

and hybrid vehicles (HEVs and PHEVs).

The electric vehicle market has maintained high growth of over 20% annually, and drivetrain electrification has emerged as a key factor determining competitiveness in the automotive industry. Amid this paradigm shift, drive motors are increasingly recognized as core components that determine driving performance, energy efficiency, and driving stability of electric vehicles. Accordingly, global automakers are simultaneously promoting the development of fundamental technologies for high-power, high-efficiency, and high-density drive motors, as well as manufacturing innovation to improve productivity(1).

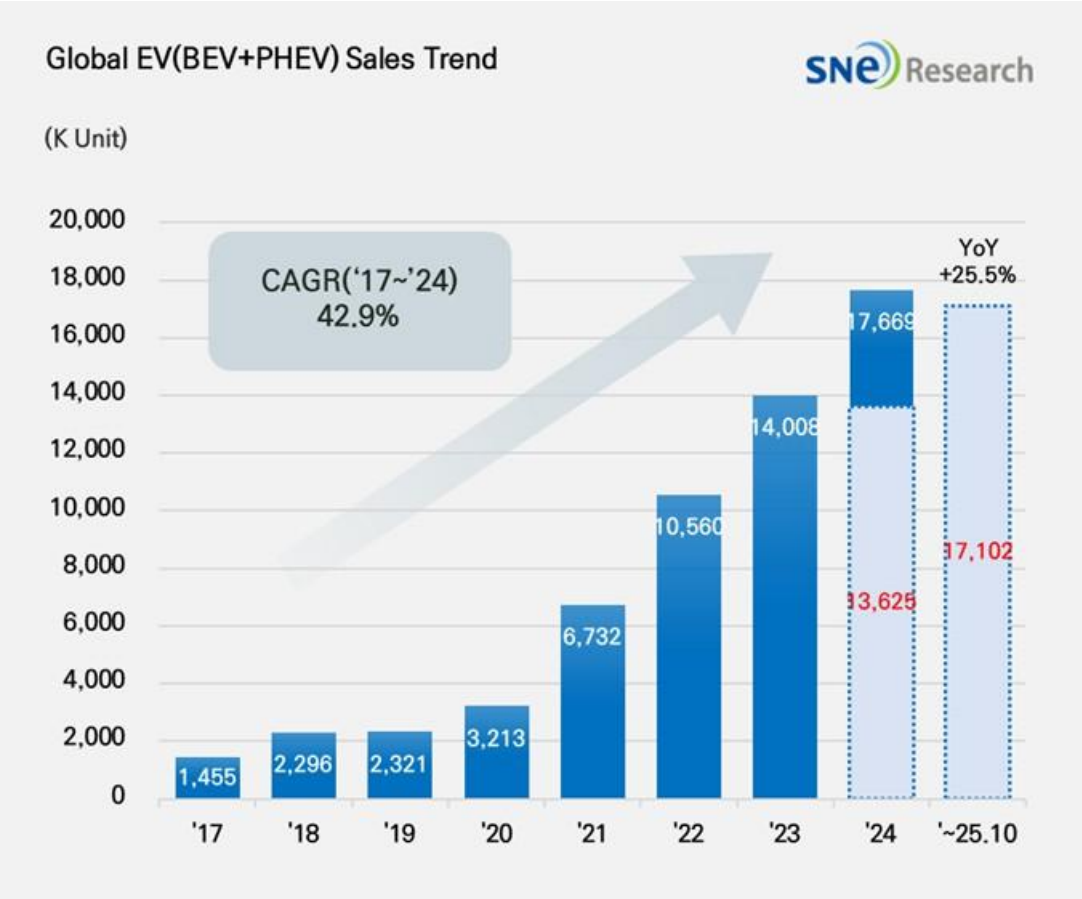

<Global trends of electric car market growth >

Technology Trends in Hairpin Motors for Eco-Friendly Vehicle Propulsion

The output of a drive motor is determined by the strength of the magnetic field generated by the supplied current; therefore, electromagnetic efficiency in converting electrical current into a magnetic field is critically important. Conventional round-wire coil insertion motors have structural limitations in winding fill factor, resulting in constraints in terms of power density and efficiency. As a result, global automakers have recently adopted hairpin winding structures using rectangular cross-section flat copper wires as a standard technology for next-generation drive motors(2).

(max 10 pages)

Key Functions and Potential Applications

Hairpin motors have the following technical advantages over conventional round-wire coil winding methods[(1), (3)]:

- Improved power density due to increased winding fill factor
- Enhanced efficiency resulting from reduced electrical resistance
- Improved cooling performance and increased durability
- Feasibility of compact and lightweight designs

Due to these technical advantages, hairpin motors are rapidly being adopted as a core technology in the drivetrains of high-performance electric vehicles and hybrid vehicles.

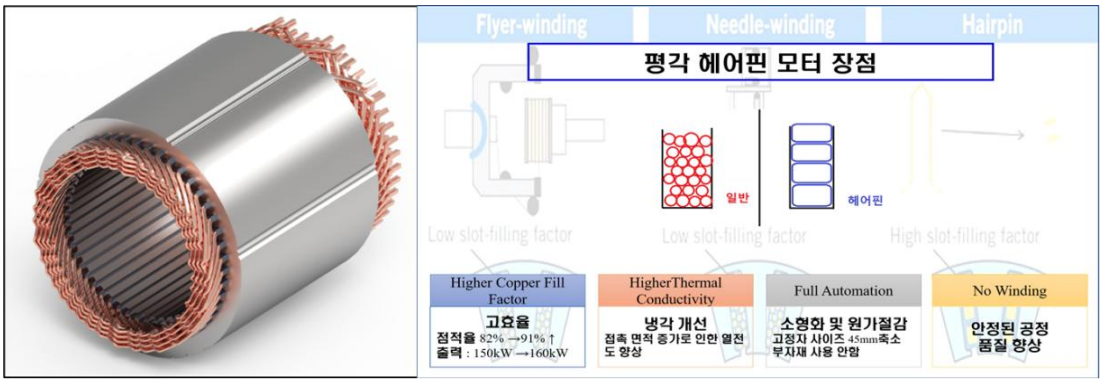

<Schematics of plane hairpin motor>

Automated Forming Manufacturing Equipment for Hairpin Stators

For the manufacturing of hairpin stators, automated production equipment capable of high-speed and high-precision forming of flat enamel-coated copper wires is essential. Such equipment is a high-precision production system that forms flat copper wires of various thicknesses into hairpins of different lengths and shapes, based on CNC bending and 3D press forming processes.

The main component modules are as follows:

- Flat Wire Coil Bobbin Supply Module: Supplies flat wire coils at a constant tension and speed, and requires technologies for preventing coil deviation and controlling feeding pressure.
- Enamel Coating Removal Module: Requires high-precision machining and position control technologies to accurately remove the enamel coating at the ends of flat wires.
- 2D Forming Module (CNC Bending): A process that forms straight flat wires into U- or V-shaped structures, requiring feed speed and tension control, as well as precise positioning control technologies.
- 3D Forming Module (Press Forming): A process that forms 2D-shaped coils into the final hairpin geometry, requiring precise supply of various dies and high-accuracy forming process control technologies.

(max 10 pages)

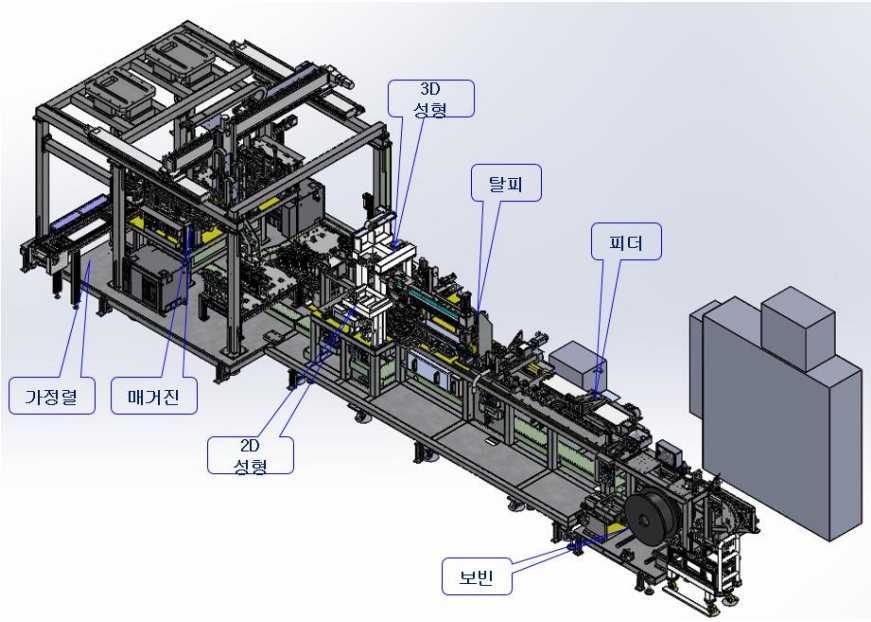

<Conceptual diagram of a hairpin forming machine>

Rationale for Joint R&D Project

Critical Technical Barriers

The hairpin forming process is a highly challenging manufacturing process in which complex nonlinear physical phenomena—such as metal plastic deformation, contact friction, elastic recovery, and tool–material interactions—act simultaneously. In particular, rectangular cross-section copper wires exhibit greater forming difficulty than round wires, and even minor variations in cross-sectional geometry directly affect springback behavior, leading to forming shape errors.

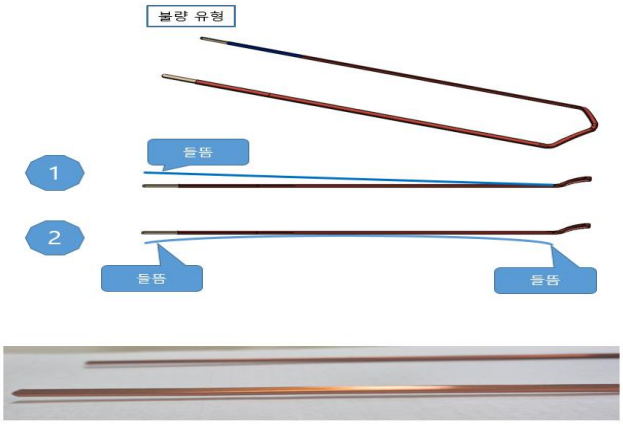

<Photo of a defective product>

Hairpin forming is a high-difficulty metal forming process in which plastic deformation and elastic recovery occur simultaneously. Rectangular cross-section copper wires are especially sensitive to springback phenomena due to anisotropic behavior and complex stress distributions, which serve as key factors determining post-forming dimensional accuracy.

However, in actual industrial environments, persistent issues have been reported in which random post-forming shape errors occur due to changes in the springback coefficient caused by

subtle cross-sectional variations arising during wire manufacturing, even when identical equipment and process conditions are applied.

Such shape deviations directly lead to the following problems:

- Occurrence of stator insertion failures
- Increased risk of insulation damage between windings
- Increased motor assembly defects and rework
- Degradation of final motor quality and reliability

Currently, most hairpin manufacturing equipment operates under repetitive production structures based on fixed process parameters, and post-process quality control relying on vision inspection is commonly employed. When defects occur, skilled operators typically respond by resetting process conditions based on experience. At present, intelligent systems capable of predicting and controlling shape variations in advance and in real time during processing are largely absent.

Conventional experience-based process parameter settings or simple data-driven AI approaches have inherent limitations in quantitatively predicting such nonlinear physical phenomena. In data-scarce environments, it is particularly difficult to ensure reliable prediction performance. Accordingly, the integration of physics-informed AI technologies that embed physical laws into learning frameworks with high-precision process digital twin technologies is critically required.

Why Global Collaboration?

Purdue University possesses world-class research capabilities in metal forming process physics modeling, springback prediction, digital twin–based manufacturing process analysis, and physics-informed AI for manufacturing processes, making it an optimal global collaboration partner capable of providing core fundamental technologies for this technological development.

Purdue University, a leading overseas research institution, is a manufacturing-focused engineering university located in Indiana, a region surrounded by numerous manufacturing companies, and serves as an industrial hub in the United States. The university has already been collecting meaningful equipment data for smart manufacturing and digital transformation in the surrounding area and utilizing them for AI-based research.

(1) Purdue maintains strong collaborative relationships with medium- to large-scale enterprises equipped with factories, facilities, and production lines;
(2) it operates specialized research centers capable of conducting testbed-based research on manufacturing and physical AI;
(3) it is strategically located in a major transportation hub in the U.S., making it the only academic institution where Korean companies can directly identify technological trends and market demands in the local environment. Therefore, global collaboration

	is essential. Accordingly, this international joint research project is a strategic R&D initiative that establishes a highly effective collaborative model linking global fundamental technologies (Purdue University), field demonstration technologies (domestic research institutes), and equipment commercialization (domestic small and medium-sized enterprises). Through this triangular cooperation framework, the project aims to directly connect research and development, validation, productization, mass production, and global deployment, thereby contributing to the advancement of technological competitiveness in the Korean manufacturing equipment industry.
Key Words	**1. Digital Twin for Manufacturing** **2. Physics-Informed AI** **3. Hairpin Motor Forming** **4. Springback Prediction** **5. Intelligent Die Control**

(max 10 pages)

3. Research and Development Objectives & Plan

Technology Readiness Level (TRL)[2]	Start of the Project	Level (3)	End of the Project	Level (6)
R&D Objectives	**R&D Objectives** The ultimate objective of this international joint research project is to identify the root causes of forming shape errors occurring in the manufacturing process of hairpin motors for electric vehicle propulsion and to implement intelligent process control technologies by integrating digital twins with physics-informed artificial intelligence (Physics-Informed AI). Through this approach, the project aims to dramatically reduce defect rates and secure quality competitiveness in fully automated manufacturing equipment. **Detailed Objectives** To achieve this objective, the following core fundamental technologies will be developed: • Establishment of a digital twin platform for hairpin manufacturing equipment • Development of physics-informed AI for estimating cross-sectional shape variations based on process loads • Development of physics-based models for springback prediction based on cross-sectional shape variations • Development of an automatic 3D die position compensation system for springback correction • Implementation of an adaptive process control system integrated with vision-based shape feedback Through this research, fully autonomous intelligent manufacturing equipment capable of predicting and correcting forming errors in advance and in real time will be realized, and next-generation premium manufacturing equipment technologies that will lead the global electric vehicle drive motor manufacturing market will be secured.			
R&D Target Specifications	Forming Shape Error (Leg Width): (Current) ±1.5 mm → (Target) ≤ ±0.5 mm			
R&D Plan	**Year 1: Establishment of Digital Twin and Cross-Sectional Shape Prediction Framework** • Construction of a hairpin manufacturing equipment testbed (flattening and forming modules) (Domestic research institute) • Development of a process monitoring system (Domestic research institute) • Development of a digital twin for process load prediction (Purdue University) • Design of a physics-informed AI framework for predicting cross-sectional shape variations (Purdue University) **Year 2: Development of Springback Prediction and Die Compensation Technologies** • Construction and integration of a hairpin manufacturing equipment testbed (insulation removal module) (Domestic research institute)			

	• Development of physics-based models for springback prediction (Purdue University) • Application and validation of physics-informed AI for cross-sectional shape variation prediction (Purdue University) • Development of algorithms for determining die position adjustments for springback compensation (Purdue University) • Construction of a multi-degree-of-freedom 3D die position control system (Domestic research institute) **Year 3: Completion of Feedback-Based Adaptive Process System** • Construction of a vision-based shape measurement system (Domestic research institute) • Development of automatic digital twin parameter update algorithms (Purdue University) • Implementation of a closed-loop process control system (Domestic research institute) • Demonstration and performance validation of testbed equipment (Domestic research institute)

4. R&R (Roles and Responsibilities)

Expected R&R of Research Institute	The research institute (Purdue University), led by the overseas partner, will be responsible for designing gait data analysis algorithms and AI models, developing the digital twin and physical AI for shape processing. • Development of a digital twin for the hairpin forming process • Development of physics-informed AI models • Development of springback prediction models • Development of digital twin parameter update algorithms
Expected R&R of Korean SME Partner	The Korean SME partner will take primary responsibility for establishing the hairpin manufacturing equipment testbed, developing the die actuation and control systems, providing demonstration and validation environments, and leading system integration and commercialization efforts. In addition, the domestic research institutes will focus on building process monitoring systems, collecting and analyzing process data, integrating control algorithms, and advancing equipment application technologies to enhance overall system performance. **(Domestic Institute 1)** • Construction of a hairpin manufacturing equipment testbed • Development of die actuation and control systems • Provision of equipment demonstration and validation environments • System integration and promotion of commercialization • **(Domestic Institute 2)** • Development of a process monitoring system

	• Collection and analysis of process data • Integration of control algorithms • Advancement of equipment application technologies

5. Expected Outcomes/Impact

Expected Outcomes and Impact	**Expected Outcomes and Industrial Impact** Through this international joint research project, we aim to secure core intelligent manufacturing technologies that can overcome the structural limitations of hairpin motor forming processes and directly apply them to next-generation electric vehicle drive motor manufacturing equipment to generate tangible industrial outcomes. **Technical Outcomes** Through this project, the following key technological achievements will be realized: • Establishment of the world's first digital twin that accurately reproduces material behavior, process loads, and springback phenomena in hairpin forming processes • Securing high-reliability process prediction technologies based on physics-informed AI that embeds physical laws into learning frameworks • Development of intelligent die control technologies capable of real-time compensation for springback variations caused by cross-sectional shape deviations • Implementation of fully automated adaptive forming processes integrating prediction, control, and feedback functions Through these achievements, the project will move beyond conventional experience-based process operation and realize a next-generation intelligent manufacturing paradigm capable of real-time perception, prediction, and control of process conditions. **Industrial Impact and Commercialization Strategy** Following the completion of this research and development effort, the developed technologies will be directly embedded into automated hairpin motor manufacturing equipment for electric vehicle applications by domestic companies and immediately commercialized for mass production. A specialized equipment manufacturer with proven experience in supplying hairpin motor manufacturing systems to major domestic and global automakers and Tier-1 motor manufacturers, including Hyundai Motor Group and BorgWarner, aims to gradually apply the project outcomes to its core equipment lineup and establish a strong foundation for commercialization. The intelligent forming equipment incorporating these technologies is expected to generate the following industrial impacts: • Dramatic stabilization of electric vehicle drive motor manufacturing quality • Cost reduction and productivity improvement through reduced defect rates

	• Implementation of unmanned automated processes by eliminating dependence on skilled labor • Commercialization of next-generation premium manufacturing equipment product lines • Strengthening technological competitiveness for entry into global automotive supply chains By achieving differentiated competitiveness through reduced defect rates, enhanced process reliability, and full automation compared to conventional equipment, the developed systems can be positioned in the premium equipment market. In addition, the technologies can be supplied as retrofit upgrade packages to existing customers, enabling expansion into both new equipment sales and equipment upgrading markets. Furthermore, through joint demonstration projects with global electric vehicle and motor manufacturers, overseas market expansion is expected to be pursued in stages, thereby strengthening export competitiveness and supporting domestic companies' transformation into global manufacturing equipment leaders.

6. References

(1) ZOU, Tianjie, et al. A comprehensive design guideline of hairpin windings for high power density electric vehicle traction motors. *IEEE Transactions on Transportation Electrification*, 2022, 8.3: 3578-3593.

(2) MADDUMAGE, Waruna, et al. Thermal management of hairpin winding traction motors in electric vehicles: Parametric evaluation of impinging oil jet cooling using CFD simulations. *Applied Thermal Engineering*, 2025, 273: 126414.

(3) GOETZ, Stefan M.; LIZANA, Ricardo; RIVERA, Sebastian. Hairpin Windings: Twists and Bends of a Technological Breakthrough [Scanning our Past]. *Proceedings of the IEEE*, 2025, 112.12: 1831-1849.